REVISION HISTORY				
ZONE	REV	DESCRIPTION	DATE	APPROVED
	-	INITIAL RELEASE	06/01/2016	hhmi\\arnoldj

ITEM	QTY	FILE NAME	DESCRIPTION	PART NUMBER	VENDOR
1	1	MBS Ball Base Plate.ipt	MBS BALL BASE PLATE	J003049	HHMI: JFRC - ID&F
2	4	LPH200.ipt	RIGID STAND POST HOLDER, L=200MM	LPH200	THORLABS
3	4	P10.ipt	1.5 DIA MOUNTING POST, 1/4"-20 TAPS, L=10"	0124-E0W	THORLABS
4	1	MBS Bowl Assy.iam	VR BALL BOWL ASSEMBLY	J005685	HHMI: JRC - ID&F
5	2	C1501_M.ipt	P-SERIES MOUNTING CLAMP, 64MM x 64MM	C1501_M	THORLABS
6	4	92303A102.ipt	WASHER, FLAT, .28 ID 1.5OD, SS	92303A102	MCMASTER
7	13	92146A029.ipt	WASHER, SPLIT LOCK, 1/4 SCREW SIZE, SS	92146A029	HHMI: JRC - ID&F
8	4	92196A542.ipt	SCREW, SHC, 1/4-20 x 1, SS	92196A542	MCMASTER
9	1	MBS REG AND MANIFOLD PLATE ASSY.iam	MBS REGULATOR AND MANIFOLD ASSY	J005658	HHMI: JRC - ID&F
10	1	MBS REG PLATE ASSY.iam	REGULATOR PLATE ASSEMBLY	J005649	HHMI: JRC - ID&F
11	1	MBS TROUGH ASSY.iam	MBS TROUGH ASSY	J005217	HHMI: JRC - ID&F
12	2	MBS CAMERA ASSY.iam	MBS CAMERA ASSY	J005233	HHMI: JRC - ID&F
13	3	MBS SIDE GUIDE CONVEX.ipt	SIDE BALL GUIDE	J005684	HHMI: JFRC - ID&F
14	16	92196A537.ipt	SCREW, SHC, 1/4-20 x 1/2, SS	92196A537	MCMASTER
15	8	92196A540.ipt	SCREW, SHC, 1/4-20 X 3/4", SS	92196A540	MCMASTER
16	1	MBS BALL.ipt	MBS BALL	J005234	HHMI: JFRC - ID&F
17	18	92141A029.ipt	WASHER, FLAT, SS, 1/4 SCREW	92141A029	MCMASTER
18	8	92196A544.ipt	SCREW, SHC, 1/4-20 x 1-1/4, SS	92196A544	MCMASTER
19	A/R	6516T13.ipt	TUBING, TYGON, CLEAR, 3/32 ID 5/32 OD	6516T13	MCMASTER
20	9	91845A029.ipt	NUT, HEX, 1/4-20, SS	91845A029	MCMASTER
21	1	92196A548.ipt	SCREW, SHC, 1/4-20 x 1-3/4, SS	92196A548	MCMASTER

PARTS LIST

NOTES:
1. CONNECT REGULATORS TO CANNONS WITH TYGON TUBING
2. APPLY TEFLON TAPE TO SURFACE OF SIDE BALL GUIDES THAT FACE BALL

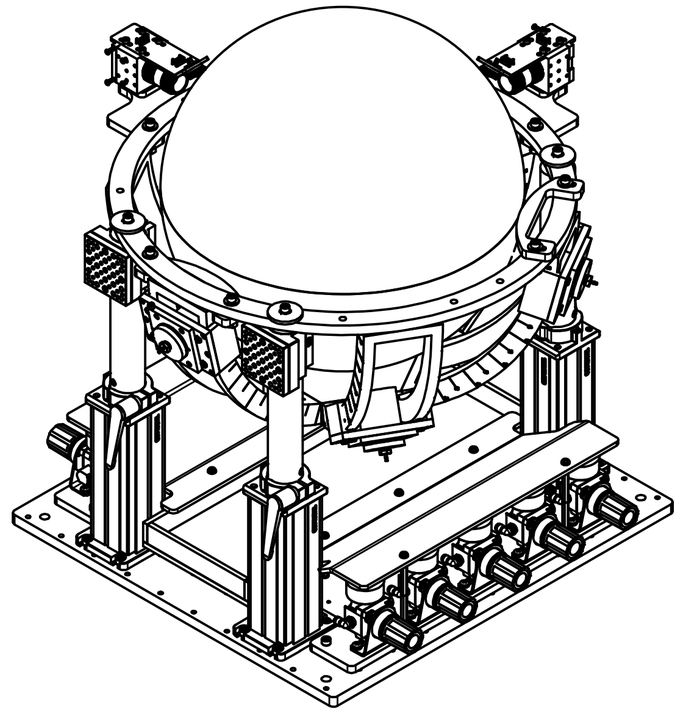

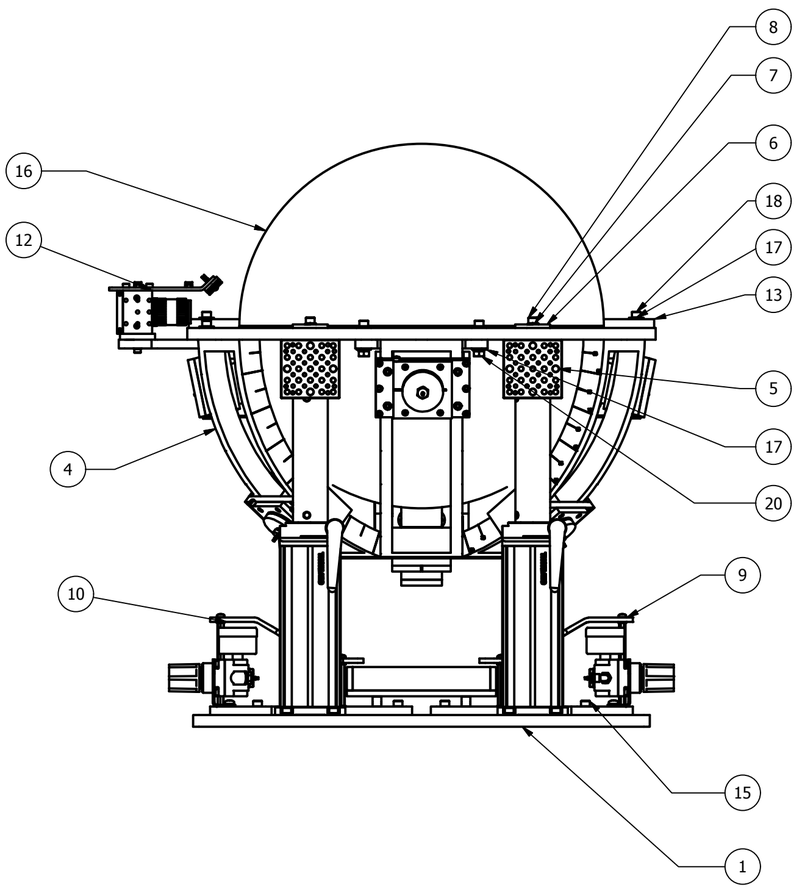

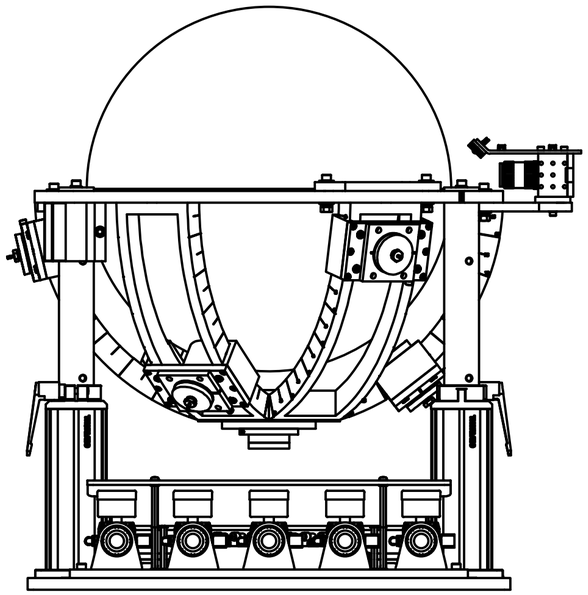

NOTICE:
INFORMATION CONTAINED IN THIS DOCUMENT OR ANY REPRODUCTION THEREOF, IS PROPRIETARY INFORMATION AND PROPERTY OF HOWARD HUGHES MEDICAL INSTITUTE. IT SHALL NOT BE DISCLOSED, COPIED, DUPLICATED OR USED FOR MANUFACTURE, PRODUCTION OR PROCUREMENT, WITHOUT THE EXPRESS WRITTEN PERMISSION OF HOWARD HUGHES MEDICAL INSTITUTE.

(UNLESS SPECIFIED OTHERWISE)
PRIMARY UNITS: INCHES
[SECONDARY UNITS]: MILLIMETERS

PRIMARY TOLERANCES:

X.X	± 0.020
X.XX	± 0.010
X.XXX	± 0.005
X.XXXX	± 0.0005
ANGULAR	± 0.5 DEG

- DO NOT SCALE DRAWING -

THIRD ANGLE PROJECTION:

hhmi Howard Hughes Medical Institute

hhmi janelia Research Campus

MBS SPHERICAL TREADMILL BASE .iam

SIZE	PART NUMBER	REV	SHEET
C	J005648	-	1 OF 1